For 300 mm wafer

Parallel Seal Type Slit Valve

New

RoHS

Long service life

3 million cycles
(at ordinary temperature)

Maintenance

Replaceable bellows
Top accessible (Made to order)

Air saving *Made to order*

Air consumption reduced by 22 %
Low pressure operation possible during normal operation (when back pressure is absent.)

Operating environmental pressure

Atmospheric pressure to 10^{-6} Pa

Low particle generation

Reduced by 1/5 or more
(compared with the current product)

Safety measures

Mechanical end lock mechanism is adopted.
Gate is held in opened or closed position in case of emergency stop.

Lightweight

14 kg
(For cassette type)

Opening window size

50 mm x 336 mm

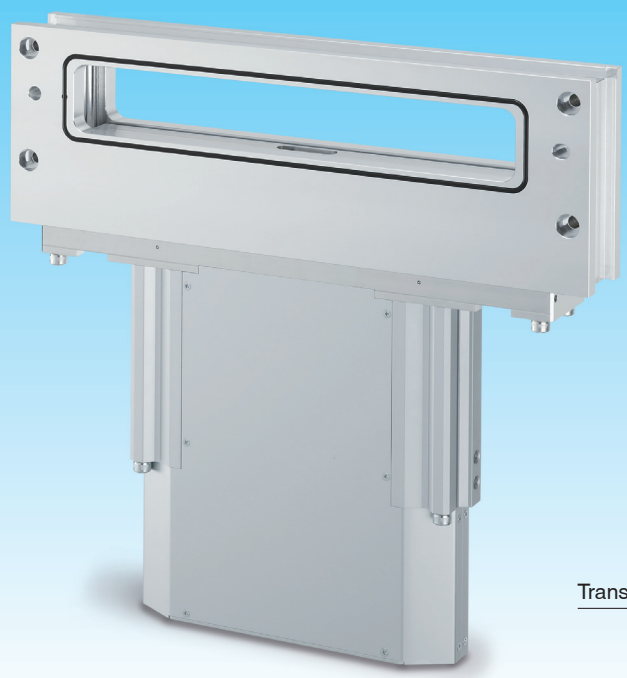

Cassette type (Standard)

Insert type (Without body)

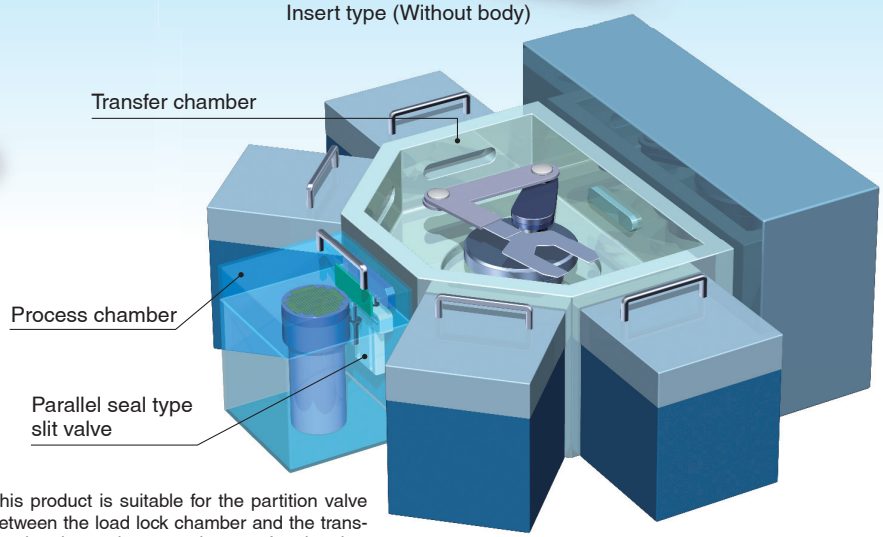

Interchangeable with the current XGT product

This product is suitable for the partition valve between the load lock chamber and the transfer chamber or between the transfer chamber and the process chamber in semiconductor equipment or other equipment.

XGTP Series

SMC

CAT.EUS140-9A-UK

Low particle generation

Longer service life

Parallel sealing motion is used.

The gate moves vertically upward and downward, gate sealing/clamping is made with a parallel motion.

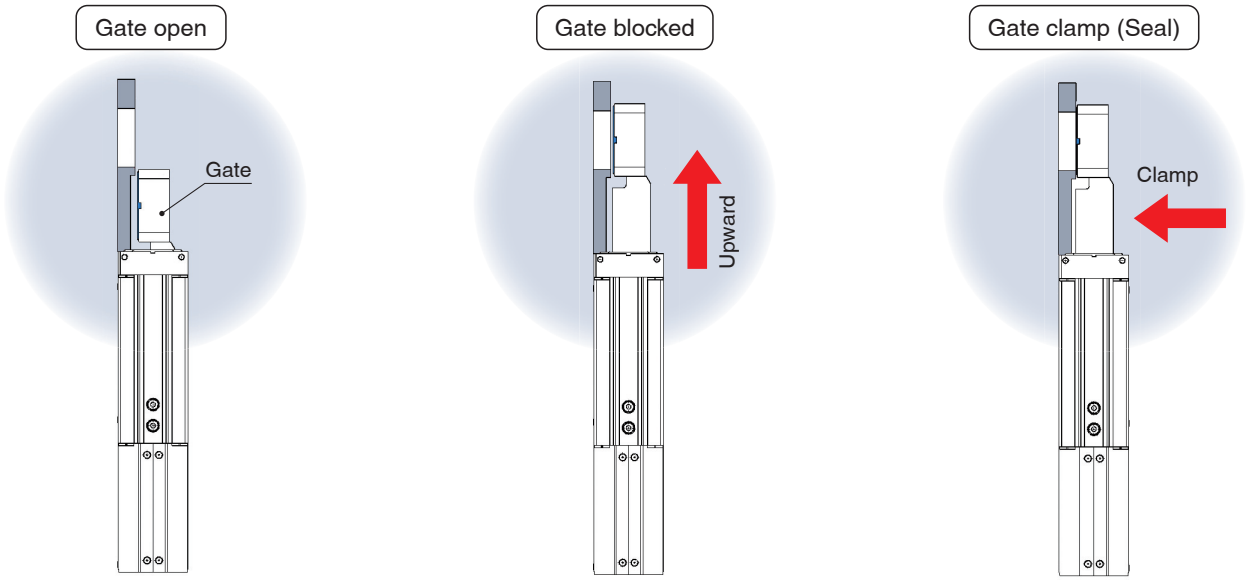

Easier maintenance

Easy replacement of bellows

1. Remove the gate.
2. Remove the side plates.
3. Remove the bonnet assembly from the drive-base assembly.
4. Replace the bellows.

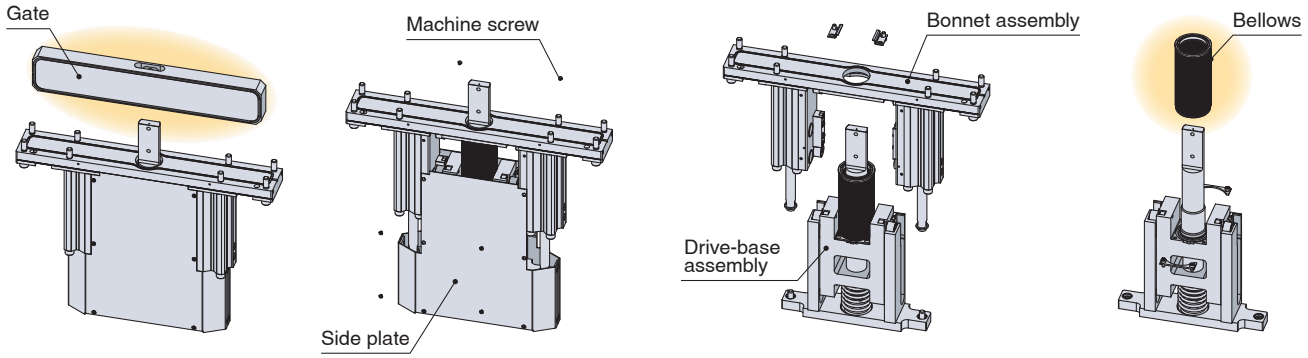

Gate can be replaced from above. Made to order

1. Remove the top plate.
2. Remove the fixing bolt.
3. Remove the gate from the body for replacement.

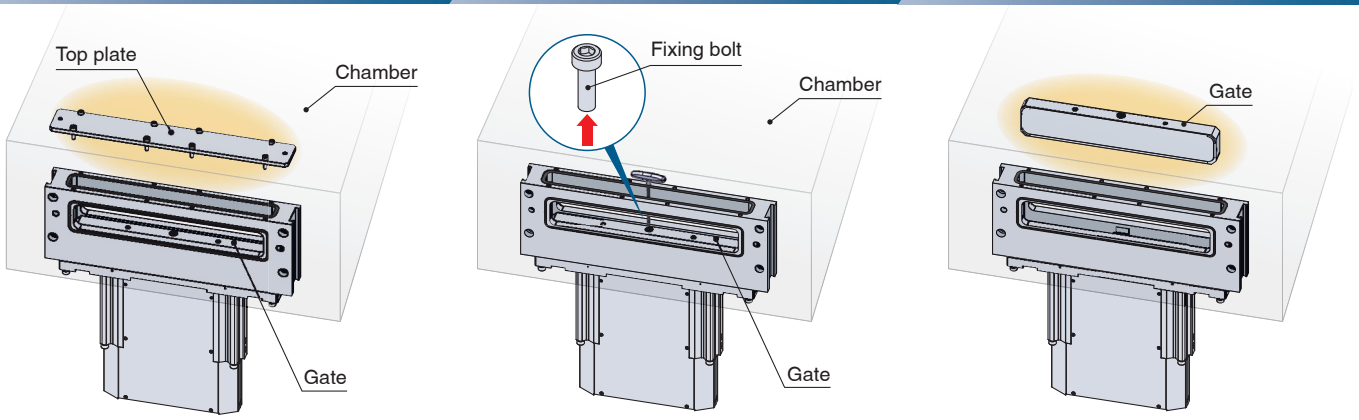

Related Products

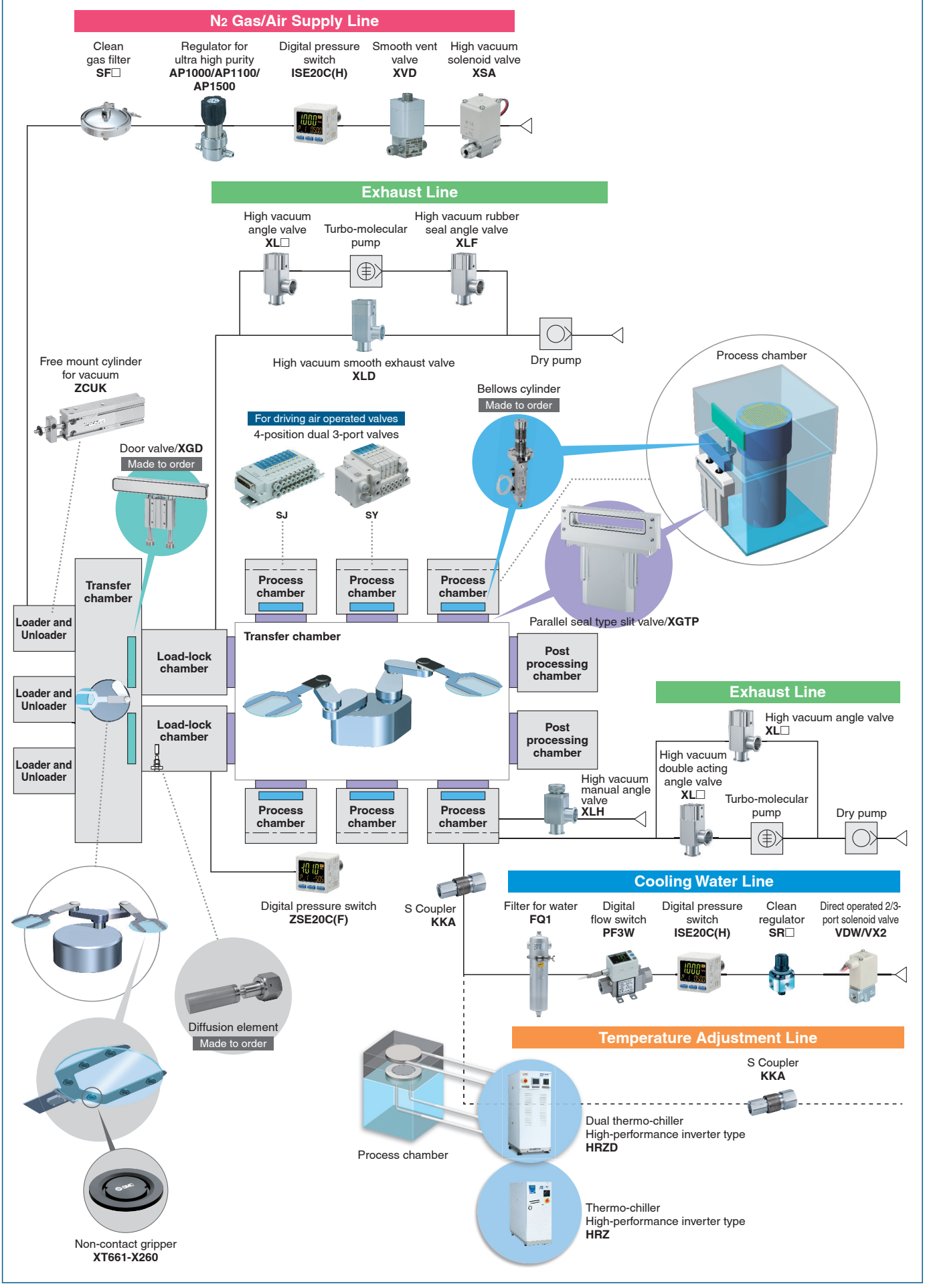

Parallel Seal Type Slit Valve
XGTP Series

RoHS

Insert type (Without body) | Cassette type (Standard)

How to Order

XGTP 3 1 2 – 50336 – 1 C ☐

- **Parallel seal type slit valve**
- **Applicable wafer size:** For 300 mm wafer
- **Number of axes and seal type:** One axis bellows
- **Valve type**
- **Opening window size:** 50 x 336 mm
- **Gate seal material**
- **Auto switch and the connector**
- **End lock**

Symbol	1	2	3
Valve type	Insert type (Without body)	Cassette type (Standard)	Cassette type (Half MESC)
	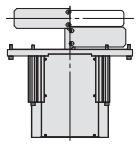	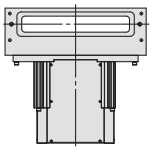	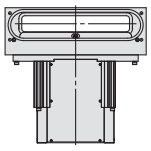

Symbol

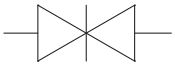

1	FKM
2	Kalrez® 4079∗1
F1	FKM∗2
F2	Kalrez® 4079∗1,3

∗1 Kalrez® is a registered trademark of E. I. du Pont de Nemours and Company or its affiliates.
∗2 Standard FKM equivalent specification: made by other manufactures. Other o-ring exposes to vacuum will have the same specifications.
∗3 Other o-ring exposes to vacuum other than gate o-rings will be changed to the same specifications as standard FKM.

Symbol	Auto switch	Connector	Note
—	—	—	—
A	D-A93	—	Lead wire: 0.5 m 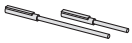 Operating temperature range: 20 °C to 60 °C
C	D-A93	Multiple connector (AMP) ∗1	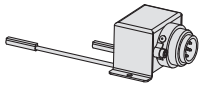 Operating temperature range: 20 °C to 60 °C
F	D-A93	D-sub connector ∗2	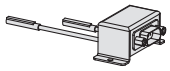 Operating temperature range: 20 °C to 60 °C

∗1 T3105000 made by AMP is recommended for the connector (female type).
∗2 CDE-9SF05 made by HIROSE ELECTRIC CO., LTD. is recommended for the connector (female type).

Symbol	End lock
—	OPEN/CLOSE end lock
N	None

Made to Order For details, please contact SMC.

1 With Built-in Heater (Up to 150 °C)

2 Heat Resistant Specification (150 °C)

Heat resistant parts are used.

3 New Materials of the Gas Contact Parts

Oxalic acid anodised, Stainless steel, etc.

4 Special O-ring (Low particle generation)

FKM only (The leakage rate is different from the standard product.)

5 Variable Sealing Force

Sealing force in normal operation and maintenance can be varied via a suitable pneumatic control circuit (End lock mechanism is not available with this option).

Construction

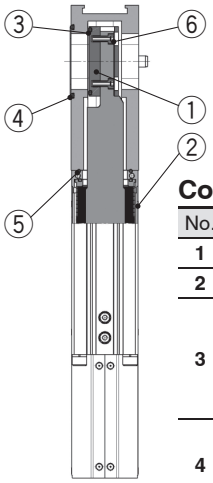

Component Parts

No.	Description	Material	Part number
1	**Gate**	A6063	XGTP300-2-1S
2	**Bellows**	AM350	XGTP300-20AS
3	**O-ring (Gate)**	FKM	XGT300-9-9S
		FKM (standard FKM equivalent)	XGT300-9-9-F1S
		Kalrez® 4079	XGT300-9-11S
4	**O-ring (Body opening side)**	FKM	XGT300-9-10S
		FKM (standard FKM equivalent)	XGT300-9-10-F1S
5	**O-ring (Bonnet assembly)**	FKM	XGT300-9-7S
		FKM (standard FKM equivalent)	XGT300-9-7-F1S
6	**Fixing bolt**	Stainless steel 316	XGT300-2-5S (2 pcs.)

Specifications

For details on the specific product precautions, refer to the "Operation Manual" on the SMC website.

Model		XGTP31□-50336
Wafer size [mm]		300
Opening window size (Height x Width) [mm]		50 x 336
Number of axes		1
Operating environmental pressure*1 [Pa] (abs)		Atmospheric pressure to 10^{-6}
Operating pressure differential [kPa]		4 or less
Operating pressure range [MPa] (G)		0.45 to 0.6
Internal leak*2 [Pa·m³/s]	**O-ring: FKM**	6.5×10^{-10}
	O-ring: Kalrez®	6.5×10^{-9}
Internal leak at reversed pressure*2 [Pa·m³/s] [Reversed pressure: 0.1 MPa (abs) or less]	**O-ring: FKM**	6.5×10^{-8}
	O-ring: Kalrez®	6.5×10^{-7}
External leak*2 [Pa·m³/s]		6.5×10^{-11}
Operating temperature*3 [°C]	**Gate part**	20 to 120/up to 150 (During bake-out)
	Actuator part	20 to 90 (Except auto switch)
Fluid		Inert gas
Operating time*4 [s]		0.6 to 1
Main material of vacuum part	**Seal material**	FKM, Kalrez® 4079 (Option)
	Bellows	Equivalent to AM350
	Gate	A6063
	Body	A5052
	Bonnet	A6061
	Others	Stainless steel 304
Exhaust direction		Free
Mounting direction		Vertical
Port size		Rc1/8
End lock mechanism		With lock mechanism in opened or closed position
Cylinder volume [L]		0.2
Weight [kg]	**Insert type (Without body)**	10
	Cassette type (Standard)	14
	Cassette type (Half MESC)	14

*1 Absolute pressure
*2 Value at normal temperature: Not including gas permeation
*3 If the temperature at the gate exceeds 90 °C, the operating temperature at actuator may go beyond the range. In this case, cool the actuator part.
*4 This shows the time after the switching valve activates and causes the gate to open and close.

Auto Switch Specifications

Auto switch model	D-A93	
Applicable load	Relay, PLC	
Load voltage	24 VDC	100 VAC
Load current range and maximum load current	5 to 40 mA	5 to 20 mA
Contact protection circuit	None	
Internal voltage drop	2.4 V or less (to 20 mA)/3 V or less (40 mA)	
Indicator light	Red light emitting diode (LED) lights up when ON.	

* When the temperature exceeds 60 °C, please use the heat resistant specification (made to order).

D-sub Connector Specifications

Description		XGTP (on side of actuating body)	Application control circuit side
D-sub connector	**Connection type**	Plug (male)	Socket (female)
	Shell size	E	
	Poles	9	

XGTP has Male Plug connection on the side of the actuating body, so for connection to the application control circuit side, please prepare a female socket.

Connector Wiring Diagram

C: Multiple connector (6P)

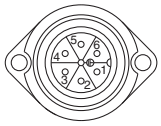

Terminal no.	Lead wire color	Auto switch
1	Blue	OPEN (–)
2	Brown	OPEN (+)
3	—	—
4	—	—
5	Brown	CLOSE (+)
6	Blue	CLOSE (–)

F: D-sub connector (9P)

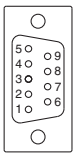

Terminal no.	Lead wire color	Auto switch
1	Brown	OPEN (+)
2	Brown	CLOSE (+)
3	—	—
4	—	—
5	—	—
6	—	—
7	Blue	OPEN (–)
8	Blue	CLOSE (–)
9	—	—

Dimensions

Insert type (Without body) / XGTP311

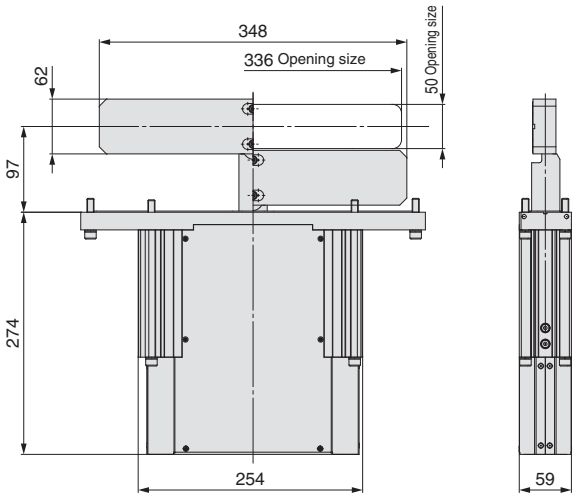

Cassette type (Standard) / XGTP312

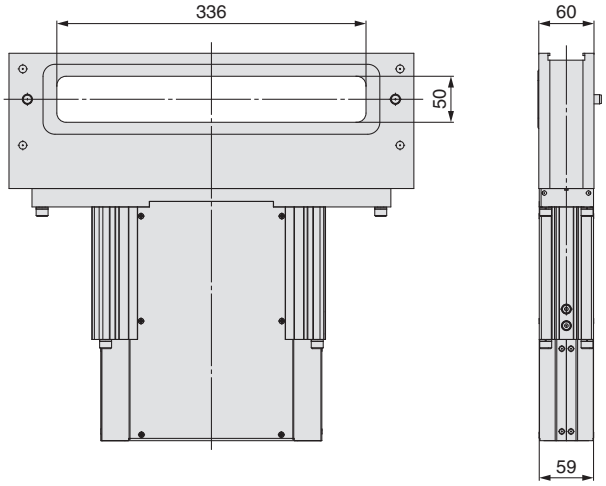

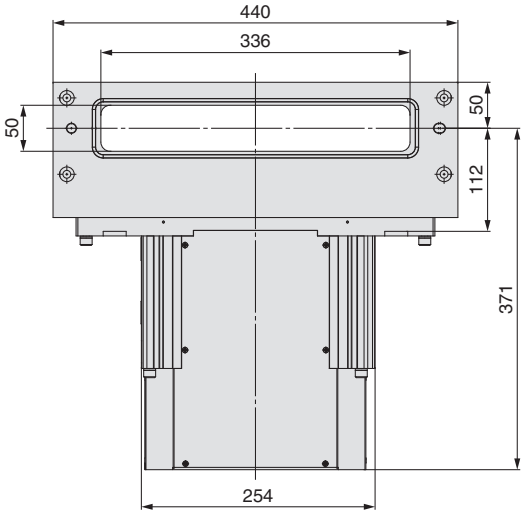

Valve seat side
(XGTP312, 313 common)

Cassette type (Half MESC) / XGTP313

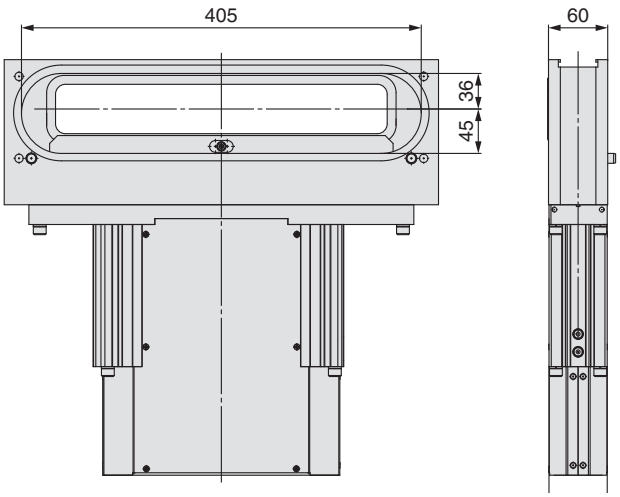

Return of Product

⚠ Warning

If the product being returned is contaminated or possibly contaminated with substances that are harmful to humans then please contact SMC in the first instance and get the product decontaminated and made safe by a specialist cleaning company. After the decontamination prescribed in the sentence before, submit Product Return Request Sheet or Detoxification/Decontamination certificate to SMC and await return contact from SMC before returning the item to SMC.
Please refer to International Chemical Safety Cards (ICSC) for a list of the harmful substances.
If you have any questions, please contact your SMC sales representative.

⚠ Safety Instructions

These safety instructions are intended to prevent hazardous situations and/or equipment damage. These instructions indicate the level of potential hazard with the labels of **"Caution," "Warning"** or **"Danger."** They are all important notes for safety and must be followed in addition to International Standards (ISO/IEC) [1], and other safety regulations.

⚠ **Caution:**	**Caution** indicates a hazard with a low level of risk which, if not avoided, could result in minor or moderate injury.
⚠ **Warning:**	**Warning** indicates a hazard with a medium level of risk which, if not avoided, could result in death or serious injury.
⚠ **Danger:**	**Danger** indicates a hazard with a high level of risk which, if not avoided, will result in death or serious injury.

1) ISO 4414: Pneumatic fluid power – General rules relating to systems.
ISO 4413: Hydraulic fluid power – General rules relating to systems.
IEC 60204-1: Safety of machinery – Electrical equipment of machines. (Part 1: General requirements)
ISO 10218-1: Manipulating industrial robots - Safety.
etc.

⚠ Warning

1. **The compatibility of the product is the responsibility of the person who designs the equipment or decides its specifications.**
   Since the product specified here is used under various operating conditions, its compatibility with specific equipment must be decided by the person who designs the equipment or decides its specifications based on necessary analysis and test results. The expected performance and safety assurance of the equipment will be the responsibility of the person who has determined its compatibility with the product. This person should also continuously review all specifications of the product referring to its latest catalogue information, with a view to giving due consideration to any possibility of equipment failure when configuring the equipment.

2. **Only personnel with appropriate training should operate machinery and equipment.**
   The product specified here may become unsafe if handled incorrectly. The assembly, operation and maintenance of machines or equipment including our products must be performed by an operator who is appropriately trained and experienced.

3. **Do not service or attempt to remove product and machinery/equipment until safety is confirmed.**
   1. The inspection and maintenance of machinery/equipment should only be performed after measures to prevent falling or runaway of the driven objects have been confirmed.
   2. When the product is to be removed, confirm that the safety measures as mentioned above are implemented and the power from any appropriate source is cut, and read and understand the specific product precautions of all relevant products carefully.
   3. Before machinery/equipment is restarted, take measures to prevent unexpected operation and malfunction.

4. **Contact SMC beforehand and take special consideration of safety measures if the product is to be used in any of the following conditions.**
   1. Conditions and environments outside of the given specifications, or use outdoors or in a place exposed to direct sunlight.
   2. Installation on equipment in conjunction with atomic energy, railways, air navigation, space, shipping, vehicles, military, medical treatment, combustion and recreation, or equipment in contact with food and beverages, emergency stop circuits, clutch and brake circuits in press applications, safety equipment or other applications unsuitable for the standard specifications described in the product catalogue.
   3. An application which could have negative effects on people, property, or animals requiring special safety analysis.
   4. Use in an interlock circuit, which requires the provision of double interlock for possible failure by using a mechanical protective function, and periodical checks to confirm proper operation.

⚠ Caution

1. **The product is provided for use in manufacturing industries.**
   The product herein described is basically provided for peaceful use in manufacturing industries.
   If considering using the product in other industries, consult SMC beforehand and exchange specifications or a contract if necessary.
   If anything is unclear, contact your nearest sales branch.

Limited warranty and Disclaimer/Compliance Requirements

The product used is subject to the following "Limited warranty and Disclaimer" and "Compliance Requirements".Read and accept them before using the product.

Limited warranty and Disclaimer

1. The warranty period of the product is 1 year in service or 1.5 years after the product is delivered, whichever is first. [2] Also, the product may have specified durability, running distance or replacement parts. Please consult your nearest sales branch.
2. For any failure or damage reported within the warranty period which is clearly our responsibility, a replacement product or necessary parts will be provided. This limited warranty applies only to our product independently, and not to any other damage incurred due to the failure of the product.
3. Prior to using SMC products, please read and understand the warranty terms and disclaimers noted in the specified catalogue for the particular products.

2) Vacuum pads are excluded from this 1 year warranty.
A vacuum pad is a consumable part, so it is warranted for a year after it is delivered. Also, even within the warranty period, the wear of a product due to the use of the vacuum pad or failure due to the deterioration of rubber material are not covered by the limited warranty.

Compliance Requirements

1. The use of SMC products with production equipment for the manufacture of weapons of mass destruction (WMD) or any other weapon is strictly prohibited.
2. The exports of SMC products or technology from one country to another are governed by the relevant security laws and regulations of the countries involved in the transaction. Prior to the shipment of a SMC product to another country, assure that all local rules governing that export are known and followed.

⚠ Caution

SMC products are not intended for use as instruments for legal metrology.
Measurement instruments that SMC manufactures or sells have not been qualified by type approval tests relevant to the metrology (measurement) laws of each country.
Therefore, SMC products cannot be used for business or certification ordained by the metrology (measurement) laws of each country.

SMC Corporation (Europe)

Austria	+43 (0)2262622800	www.smc.at	office@smc.at
Belgium	+32 (0)33551464	www.smc.be	info@smc.be
Bulgaria	+359 (0)2807670	www.smc.bg	office@smc.bg
Croatia	+385 (0)13707288	www.smc.hr	office@smc.hr
Czech Republic	+420 541424611	www.smc.cz	office@smc.cz
Denmark	+45 70252900	www.smcdk.com	smc@smcdk.com
Estonia	+372 651 0370	www.smcee.ee	info@smcee.ee
Finland	+358 207513513	www.smc.fi	smcfi@smc.fi
France	+33 (0)164761000	www.smc-france.fr	supportclient@smc-france.fr
Germany	+49 (0)61034020	www.smc.de	info@smc.de
Greece	+30 210 2717265	www.smchellas.gr	sales@smchellas.gr
Hungary	+36 23513000	www.smc.hu	office@smc.hu
Ireland	+353 (0)14039000	www.smcautomation.ie	sales@smcautomation.ie
Italy	+39 03990691	www.smcitalia.it	mailbox@smcitalia.it
Latvia	+371 67817700	www.smc.lv	info@smc.lv
Lithuania	+370 5 2308118	www.smclt.lt	info@smclt.lt
Netherlands	+31 (0)205318888	www.smc.nl	info@smc.nl
Norway	+47 67129020	www.smc-norge.no	post@smc-norge.no
Poland	+48 222119600	www.smc.pl	office@smc.pl
Portugal	+351 214724500	www.smc.eu	apoioclientept@smc.smces.es
Romania	+40 213205111	www.smcromania.ro	smcromania@smcromania.ro
Russia	+7 (812)3036600	www.smc.eu	sales@smcru.com
Slovakia	+421 (0)413213212	www.smc.sk	office@smc.sk
Slovenia	+386 (0)73885412	www.smc.si	office@smc.si
Spain	+34 945184100	www.smc.eu	post@smc.smces.es
Sweden	+46 (0)86031240	www.smc.nu	smc@smc.nu
Switzerland	+41 (0)523963131	www.smc.ch	info@smc.ch
Turkey	+90 212 489 0 440	www.smcturkey.com.tr	info@smcturkey.com.tr
UK	+44 (0)845 121 5122	www.smc.uk	sales@smc.uk
South Africa	+27 10 900 1233	www.smcza.co.za	zasales@smcza.co.za

Printing AY 00 Printed in Spain

Specifications are subject to change without prior notice and any obligation on the part of the manufacturer